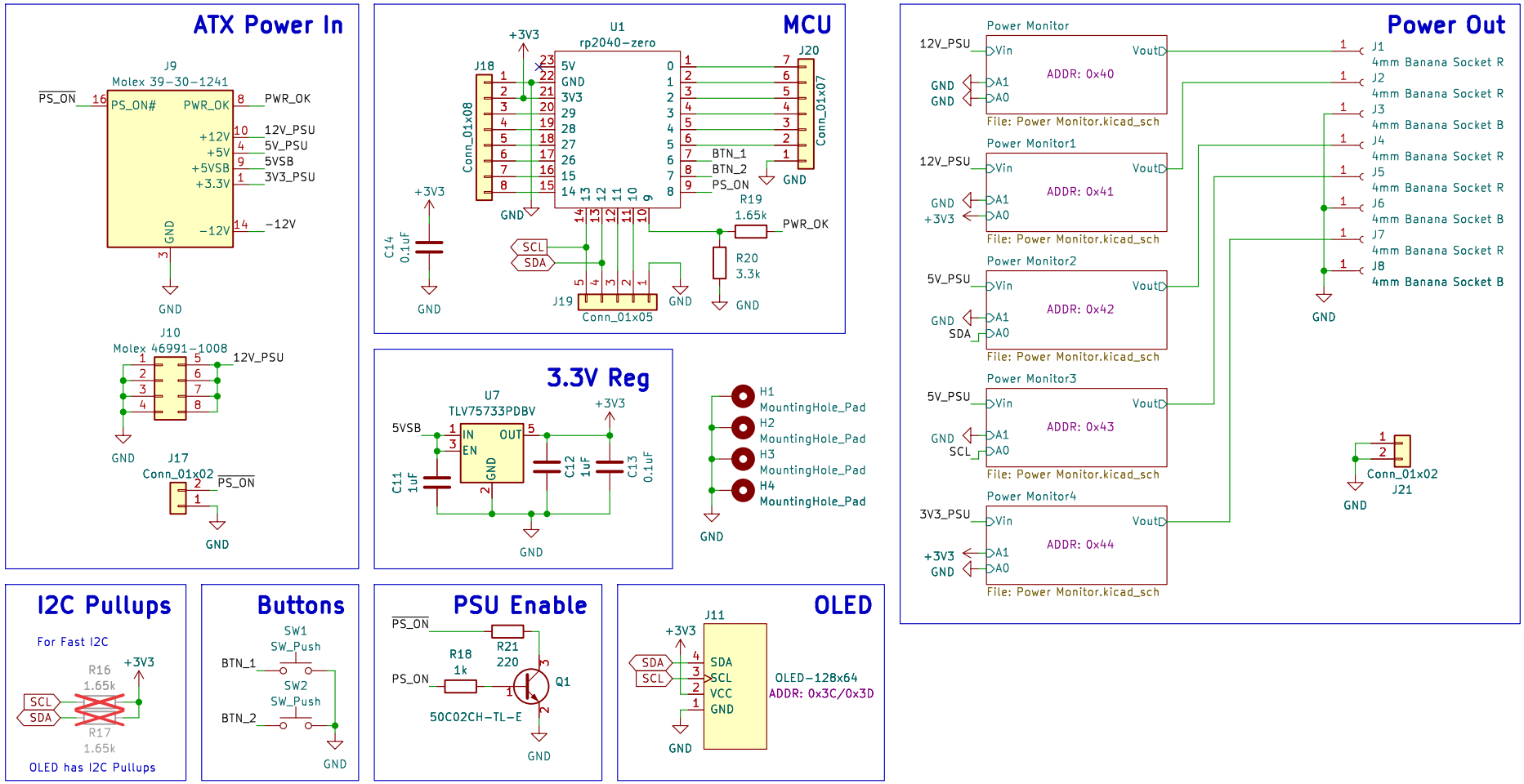

Sheet: /
File: ATX PSU Bench Supply.kicad_sch

Title:

Size: A4	Date:	Rev:
KiCad E.D.A. kicad (7.0.0)		Id: 1/6

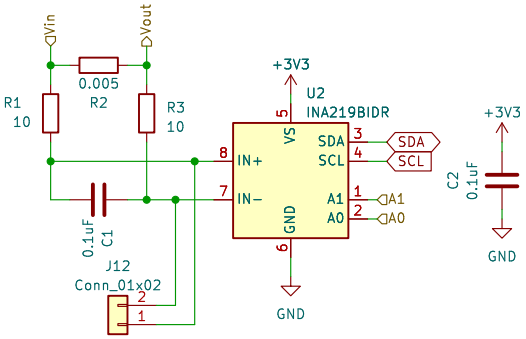

Sheet: /Power Monitor/
File: Power Monitor.kicad_sch

Title:

Size: A4	Date:	Rev:
KiCad E.D.A. kicad (7.0.0)		Id: 2/6

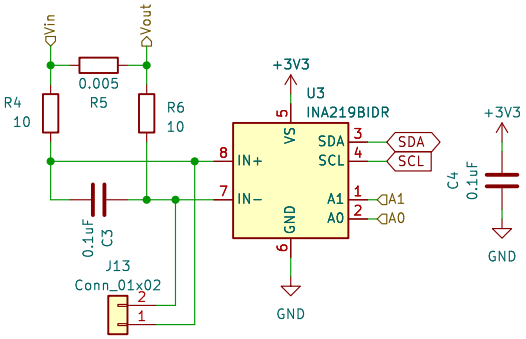

Sheet: /Power Monitor1/
File: Power Monitor.kicad_sch

Title:

Size: A4	Date:	Rev:
KiCad E.D.A. kicad (7.0.0)		Id: 3/6

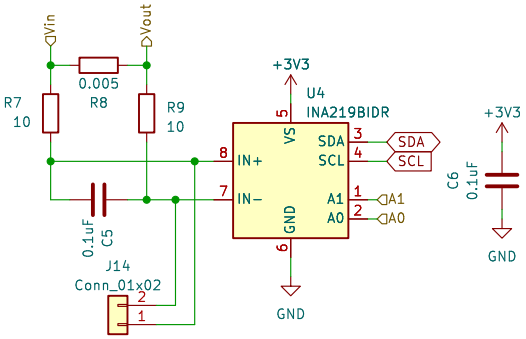

Sheet: /Power Monitor2/
File: Power Monitor.kicad_sch

Title:

Size: A4	Date:	Rev:
KiCad E.D.A. kicad (7.0.0)		Id: 4/6

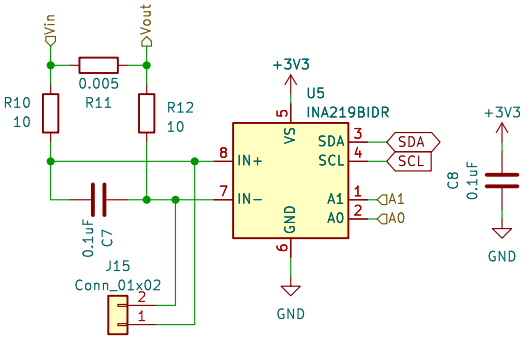

Sheet: /Power Monitor3/
File: Power Monitor.kicad_sch

Title:

Size: A4	Date:	Rev:
KiCad E.D.A. kicad (7.0.0)		Id: 5/6

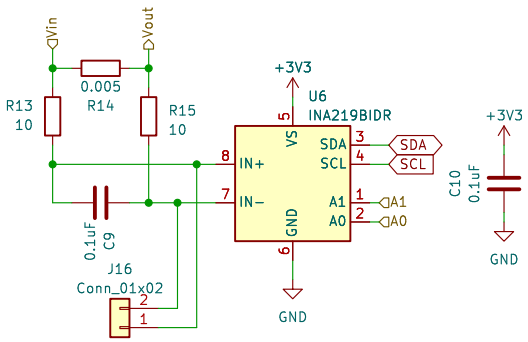

Sheet: /Power Monitor4/
File: Power Monitor.kicad_sch

Title:

Size: A4	Date:	Rev:
KiCad E.D.A. kicad (7.0.0)		Id: 6/6